Rozmery v mm; Maße in mm; Dimensions in mm

HL3LG RAM12
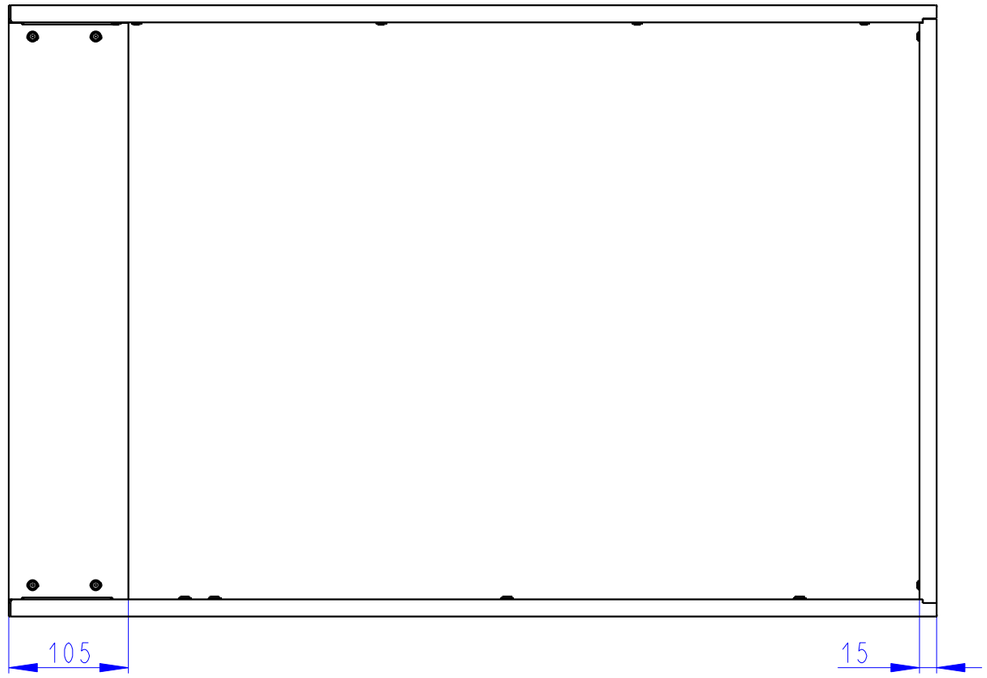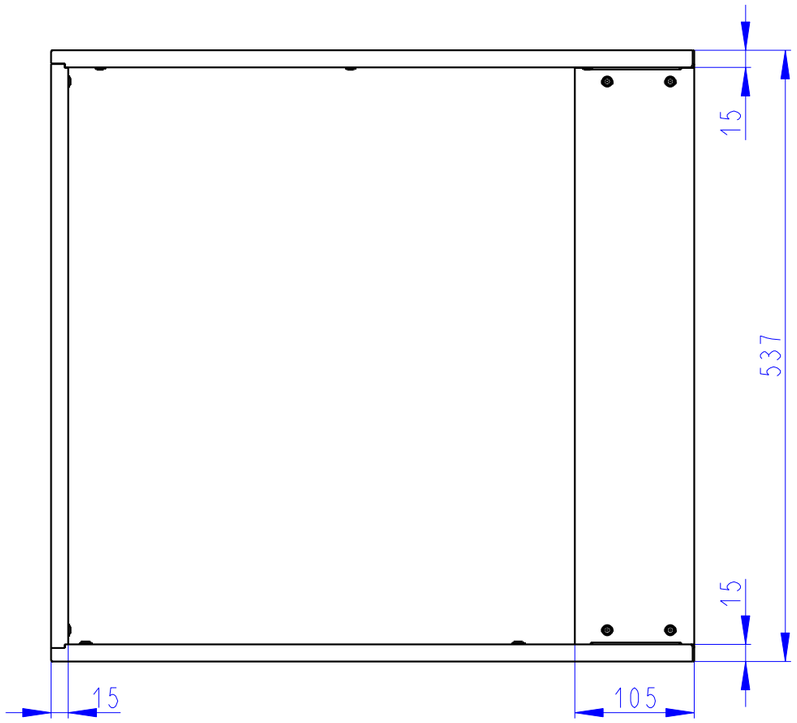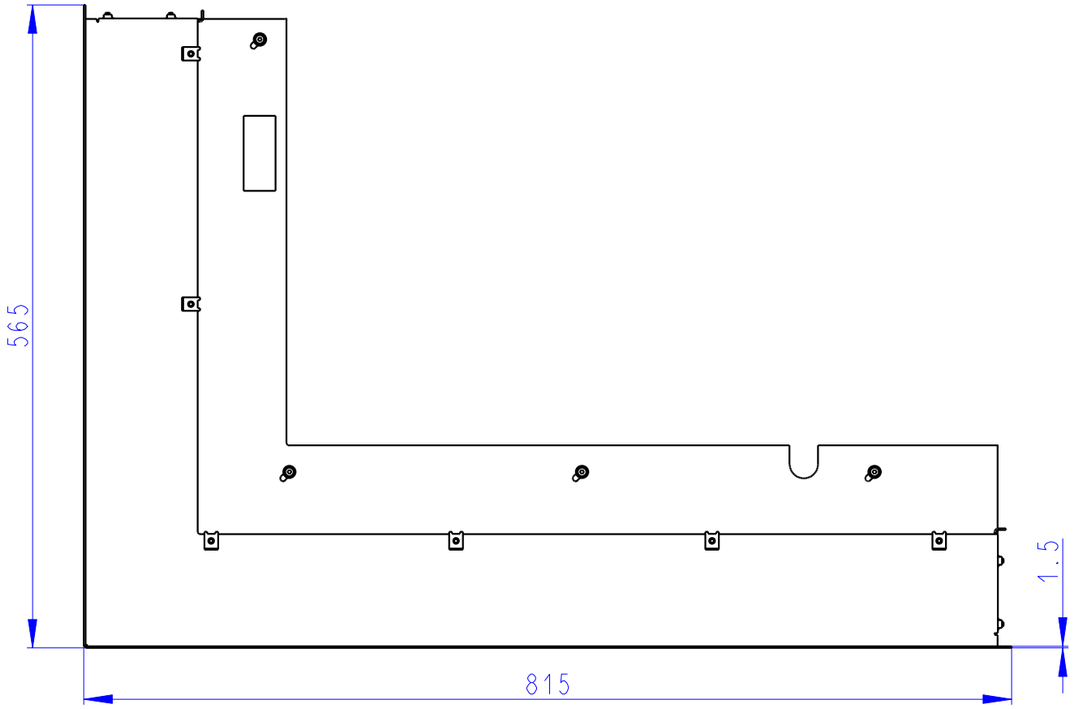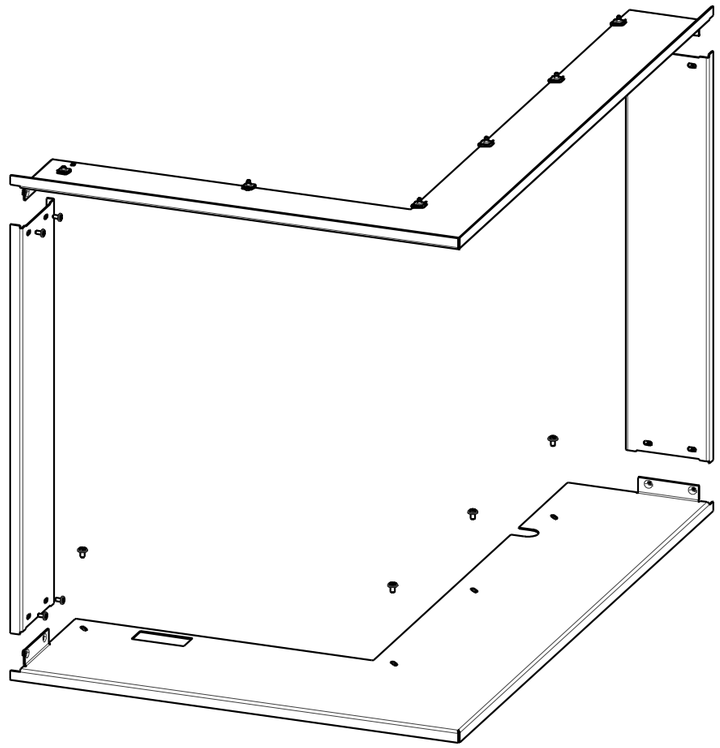
5,5 kg